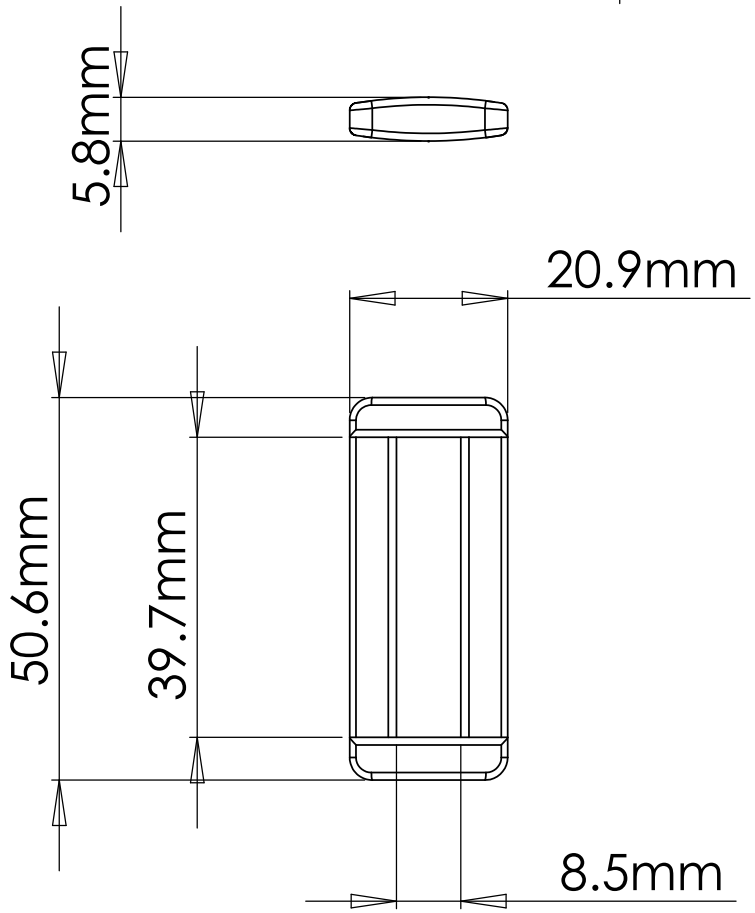

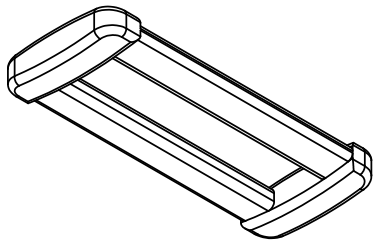

UNLESS OTHERWISE SPECIFIED: DIMENSIONS ARE IN MILLIMETERS SURFACE FINISH: TOLERANCES: LINEAR: ANGULAR:	FINISH:				DEBUR AND BREAK SHARP EDGES	DO NOT SCALE DRAWING / REVISION
						COMMSET LTD
	NAME	SIGNATURE	DATE			TITLE:
DRAWN	MARINSKI					
CHK'D						
APPV'D						
MFG						
Q.A				MATERIAL: PA6		DWG NO. LACE_HOOP_PART A4
				WEIGHT: 3.6 gr.		SCALE:1:1 / SHEET 1 OF 1